E L E C T R O P O W E R

WEP2416 - Standard Rectifier

1400 - 2000 $V_{RRM;}$ 2400 A avg

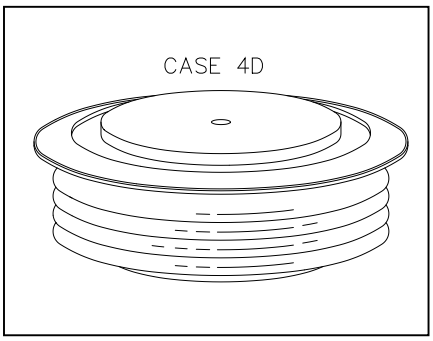

****

GENERAL PURPOSE HIGH POWER STANDARD RECTIFIER

Features:

- **All Diffused Structure**
- **High Surge rating**
- **Blocking capabilty up to 2000 volts**
- **Soft Reverse Recovery**
- **Rugged Ceramic Hermetic Package**
- **Pressure Assembled Device**

ELECTRICAL CHARACTERISTICS AND RATINGS

Reverse Blocking

Device Type	V_{RRM} (1)	V_{RSM} (1)
WEP2416NC200	2000	2100

V_{RRM} = Repetitive peak reverse voltage
V_{RSM} = Non repetitive peak reverse voltage (2)

Repetitive peak reverse leakage	I_{RRM}	10 mA 50 mA (3)

Notes:
All ratings are specified for Tj=25 °C unless otherwise stated.

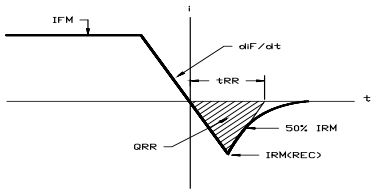

REVERSE RECOVERY CHARACTERISTIC

Conducting - on state

Parameter	Symbol	Min.	Max.	Typ	Units	Conditions
Average value of on-state current	$I_{F(AV)}$		2400		A	Sinewave,180° conduction,T_c =100°C
RMS value of on-state current	I_{FRMS}		3800		A	Nominal value
Peak one cycle surge (non repetitive) current	I_{FSM}		32000 30000		A A	8.3 msec (60Hz), sinusoidal wave-shape, 180° conduction, T_j = 185 °C 10.0 msec (50Hz), sinusoidal wave-shape, 180° conduction, T_j = 185 °C
I square t	I^2t		$4.3x10^6$		A^2s	8.3 msec and 10 msec
Peak on-state voltage	V_{FM}		1.70		V	I_{FM} = 7600 A; Tj = 160 oC
Reverse Recovery Current (4)	$I_{RM(REC)}$		260		A	I_{FM} = 1000 A; dI_F/dt = 10 A/µs, Tj = 160 oC
Reverse Recovery Charge (4)	Q_{rr}		*		µC	
Reverse Recovery Time (4)	t_{RR}		*		µs	

THERMAL AND MECHANICAL CHARACTERISTICS
WEP2416 - Standard Rectifier

Parameter	Symbol	Min.	Max.	Typ.	Units	Conditions
Operating temperature	T_j	-40	+185		°C	
Storage temperature	T_{stg}	-40	+185		°C	
Thermal resistance - junction to case	$R_{\Theta (j-c)}$		0.023 0.046		°C/W	Double sided cooled Single sided cooled
Thermal resistance - case to sink	$R_{\Theta (c-s)}$		.010 .020		°C/W	Double sided cooled * Single sided cooled *
Mounting force	P	5000 22.3	6000 26.7		lb. kN	
Weight	W			16 460	oz. g	

* Mounting surfaces smooth, flat and greased

E L E C T R O P O W E R

WEP2416 - Standard Rectifier

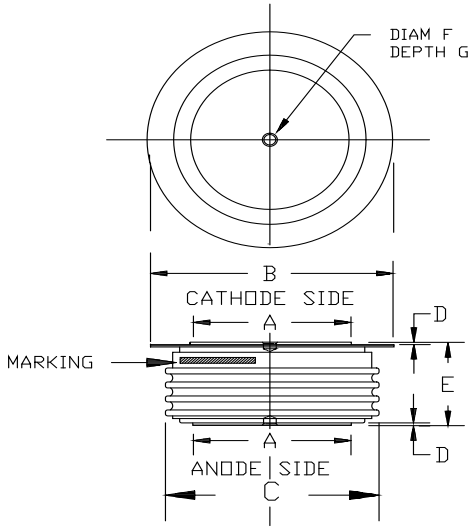

OUTLINE DIMENSIONS - CASE 4D				
DIMENSIONS	Min. mm	Max. mm	Min. In.	Max. In.
DIAM A	43.18	48.26	1.70	1.90
DIAM B	63.50	75.18	2.50	2.96
DIAM C	--	67.31	--	2.65
D	0.76	--	0.03	--
E	25.40	27.18	1.00	1.07
F	3.30	3.81	0.13	0.15
G	1.78	2.03	0.07	0.08

STRIKE DISTANCE = .73 INCH / 18.5 MM MIN.
CREEPAGE DISTANCE = 1.17 INCH / 29.7 MM MIN.

Electro Power Enterprise
11,12- B.G. CHAVDA INDUSTRIAL ESTATE, B/H VISHAL ENGINEERING NR SHRINATHJI ESTATE, NUTAN NAGRIK BANK ROAD CHANGODAR, AHMEDABAD,GUJARAT 382213
Email: Epe.rajesh@gmail.com | info@electropowerenterprise.in
Phn: +91 7600343075|7600343092
Website: https://electropowerenterprise.in/