E L E C T R O P O W E R

WEP2052NC400 - Standard Rectifier

****

GENERAL PURPOSE HIGH POWER STANDARD RECTIFIER

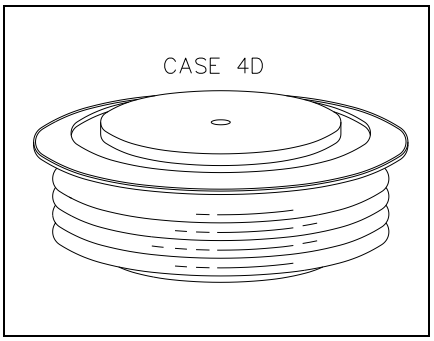

Features:

- **. All Diffused Structure**
- **. High Surge rating**
- **. Soft Reverse Recovery**
- **. Rugged Ceramic Hermetic Package**
- **. Pressure Assembled Device**

ELECTRICAL CHARACTERISTICS AND RATINGS

Reverse Blocking

Device Type	V_{RRM} (1)	V_{RSM} (1)
WEP2052	4000	4100

V_{RRM} = Repetitive peak reverse voltage
V_{RSM} = Non repetitive peak reverse voltage (2)

Notes:
All ratings are specified for Tj=25 °C unless otherwise stated.
(1) All voltage ratings are specified for an applied 50Hz/60zHz sinusoidal waveform over the temperature range -40 to +175 °C.
(2) 10 msec. max. pulse width
(3) Maximum value for Tj = 175 °C.
(4) See parameter definition below :

Repetitive peak reverse leakage	I_{RRM}	10 mA 75 mA (3)

Conducting - on state

Parameter	Symbol	Min.	Max.	Typ	Units	Conditions
Average value of on-state current	$I_{F(AV)}$		2052		A	Sinewave,180° conduction,T_c =100°C
RMS value of on-state current	I_{FRMS}		3755		A	Nominal value
Peak one cycle surge (non repetitive) current	I_{FSM}		21400 19500		A A	8.3 msec (60Hz), sinusoidal wave-shape, 180° conduction, T_j = 175 °C 10.0 msec (50Hz), sinusoidal wave-shape, 180° conduction, T_j = 175 °C
I square t	I^2t		$2.3x10^6$		A^2s	8.3 msec and 10 msec
Peak on-state voltage	V_{FM}		1.90		V	I_{FM} = 3000 A
Reverse Recovery Current (4)	$I_{RM(REC)}$		250		A	I_{FM} = 1000 A; dI_F/dt = 10 A/µs, Tj = 160 oC
Reverse Recovery Charge (4)	Q_{rr}		*		µC	
Reverse Recovery Time (4)	t_{RR}		*		µs	

***** For guaranteed maximum values, contact factory

W E P 2 0 5 2 N C 4 0 0

Parameter	Symbol	Min.	Max.	Typ.	Units	Conditions
Operating temperature	T_j	-40	+175		°C	
Storage temperature	T_{stg}	-40	+175		°C	
Thermal resistance - junction to case	$R_{\Theta (j-c)}$		0.023 0.046		°C/W	Double sided cooled Single sided cooled
Thermal resistance - case to sink	$R_{\Theta (c-s)}$		.010 .020		°C/W	Double sided cooled * Single sided cooled *
Mounting force	P	5000 22.3	6000 26.7		lb. kN	

* Mounting surfaces smooth, flat and greased

CASE OUTLINE AND DIMENSIONS

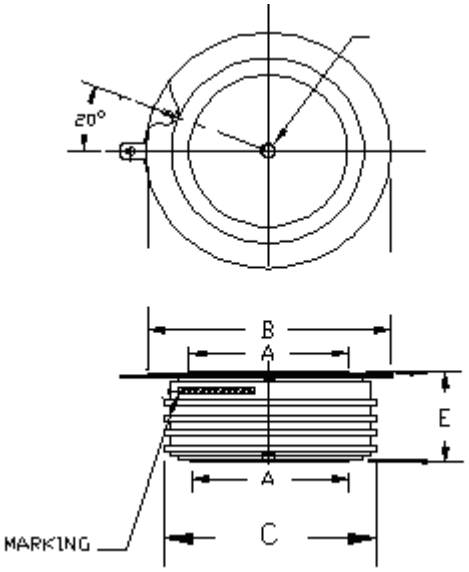

A: 47 mm
B: 74 mm
C: 66 mm
E: 26 mm

Electro Power Enterprise
11,12- B.G. CHAVDA INDUSTRIAL ESTATE, B/H VISHAL ENGINEERING NR SHRINATHJI ESTATE, NUTAN NAGRIK BANK ROAD CHANGODAR, AHMEDABAD,GUJARAT 382213
Email: Epe.rajesh@gmail.com | info@electropowerenterprise.in
Phn: +91 – 9825022936|7600343075|7600343092
Website: https://electropowerenterprise.in/