E L E C T R O P O W E R

NEP1467NS260 - Power Thyristor

2600 V_{DRM}; 1467 A avg

****

HIGH POWER THYRISTOR FOR PHASE CONTROL APPLICATIONS

Features:

- **. All Diffused Structure**
- **. Center Amplifying Gate Configuration**
- **. Guaranteed Maximum Turn-Off Time**
- **. High dV/dt Capability**
- **. Pressure Assembled Device**

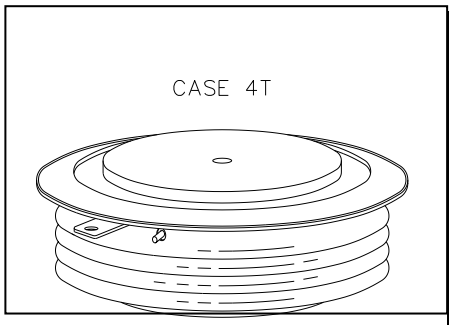

ELECTRICAL CHARACTERISTICS AND RATINGS

Blocking - Off State

Device Type	V_{RRM} (1)	V_{DRM} (1)	V_{RSM} (1)
NEP1467 NS260	2600	2600	2700

V_{RRM} = Repetitive peak reverse voltage
V_{DRM} = Repetitive peak off state voltage
V_{RSM} = Non repetitive peak reverse voltage (2)

Notes:
All ratings are specified for Tj=25 °C unless otherwise stated.
(1) All voltage ratings are specified for an applied 50Hz/60zHz sinusoidal waveform over the temperature range -40 to +125 °C.
(2) 10 msec. max. pulse width
(3) Maximum value for Tj = 125 °C.
(4) Minimum value for linear and exponential waveshape to 80% rated V_{DRM}. Gate open. Tj = 125 °C.
(5) Non-repetitive value.

Repetitive peak reverse leakage and off state leakage	I_{RRM} / I_{DRM}	10 mA 65 mA (3)
Critical rate of voltage rise	dV/dt (4)	500 V/µsec

Conducting - on state

Parameter	Symbol	Min.	Max.	Typ.	Units	Conditions
Average value of on-state current	$I_{T(AV)}$		1467		A	T_c=93°C
RMS value of on-state current	I_{TRMS}		2912		A	Nominal value
Peak one cycle surge (non repetitive) current	I_{TSM}		23600 21500		A A	8.3 msec (60Hz), sinusoidal wave-shape, 180° conduction, T_j = 125 °C 10.0 msec (50Hz), sinusoidal wave-shape, 180° conduction, T_j = 125 °C
I square t	I^2t		$2.3x10^6$		A^2s	8.3 msec and 10.0 msec
Latching current	I_L		800		mA	V_D = 24 V; R_L= 12 ohms
Holding current	I_H		400		mA	V_D = 24 V; I = 2.5 A
Peak on-state voltage	V_{TM}		1.69		V	I_{TM} = 2550 A;
Critical rate of rise of on-state current (5)	di/dt		200		A/µs	Switching from V_{DRM} ≤ 1000 V, non-repetitive

NEP1467NS260 - Power Thyristor

Gating

Parameter	Symbol	Min.	Max.	Typ.	Units	Conditions
Peak gate power dissipation	P_{GM}		200		W	t_p = 40 us
Average gate power dissipation	$P_{G(AV)}$		5		W	
Peak gate current	I_{GM}		10		A	
Gate current required to trigger all units	I_{GT}		300 150 125		mA mA mA	V_D = 6 V;R_L = 3 ohms;T_j = -40 ºC V_D = 6 V;R_L = 3 ohms;T_j = +25 ºC V_D = 6 V;R_L = 3 ohms;T_j = +125ºC
Gate voltage required to trigger all units	V_{GT}	 0.30	5 3		V V V	V_D = 6 V;R_L = 3 ohms;T_j = -40 ºC V_D = 6 V;R_L = 3 ohms;T_j = 0-125ºC V_D = Rated V_{DRM}; R_L = 1000 ohms; T_j = + 125 ºC
Peak negative voltage	V_{GRM}		5		V	

Dynamic

Parameter	Symbol	Min.	Max.	Typ.	Units	Conditions
Delay time	t_d		1.5	0.7	µs	I_{TM} = 50 A; V_D = Rated V_{DRM} Gate pulse: V_G = 20 V; R_G = 20 ohms; t_r = 0.1 µs; t_p = 20 µs
Turn-off time (with V_R = -50 V)	t_q		500	250	µs	I_{TM} = 1000 A; di/dt = 25 A/µs; V_R ≥ -50 V; Re-applied dV/dt = 20 V/µs linear to 80% V_{DRM}; V_G = 0; T_j = 125 ºC; Duty cycle ≥ 0.01%
Reverse recovery charge	Q_{rr}		*		µC	I_{TM} = 1000 A; di/dt = 25 A/µs; V_R ≥ -50 V

* For guaranteed max. value, contact factory.

THERMAL AND MECHANICAL CHARACTERISTICS AND RATINGS

Parameter	Symbol	Min.	Max.	Typ.	Units	Conditions
Operating temperature	T_j	-40	+125		ºC	
Storage temperature	T_{stg}	-40	+150		ºC	
Thermal resistance - junction to case	$R_{\Theta (j-c)}$		0.025 0.050		ºC/W	Double sided cooled Single sided cooled
Thermal resistamce - case to sink	$R_{\Theta (c-s)}$		0.010 0.020		ºC/W	Double sided cooled * Single sided cooled *
Mounting force	P	20	24		kN	

* Mounting surfaces smooth, flat and greased

Note : for case outline and dimensions, see case outline drawing in page 3 of this Technical Data

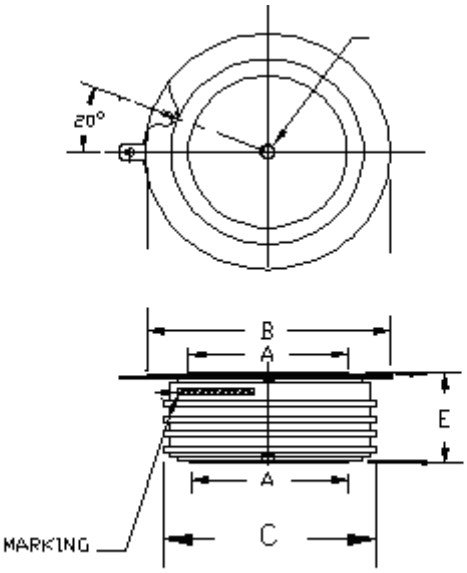

A: 47 mm
B: 74 mm
C: 66 mm
E: 26 mm