E L E C T R O P O W E R

NEP0910LS200/260 - Power Thyristor

500 - 1600 $V_{DRM;}$ 1400 A rms

****

HIGH POWER THYRISTOR FOR PHASE CONTROL APPLICATIONS

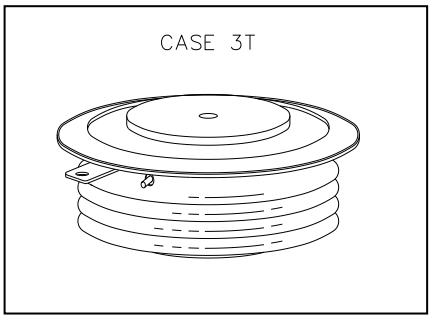

Features:

- . All Diffused Structure
- . Center Amplifying Gate Configuration
- . Blocking capabilty up to 1600 volts
- . Guaranteed Maximum Turn-Off Time
- . High dV/dt Capability
- . Pressure Assembled Device

ELECTRICAL CHARACTERISTICS AND RATINGS

Blocking - Off State

Device Type	V_{RRM} (1)	V_{DRM} (1)	V_{RSM} (1)
NEP0910LS200	2000	2000	2000
NEP0910LS260	2600	2600	2600

V_{RRM} = Repetitive peak reverse voltage
V_{DRM} = Repetitive peak off state voltage
V_{RSM} = Non repetitive peak reverse voltage (2)

Repetitive peak reverse leakage and off state leakage	I_{RRM} / I_{DRM}	15 mA 35 mA (3)
Critical rate of voltage rise (4)	dV/dt	200 V/µsec

Notes:
All ratings are specified for Tj=25 °C unless otherwise stated.
(1) All voltage ratings are specified for an applied 50Hz/60zHz sinusoidal waveform over the temperature range -40 to +125 °C.
(2) 10 msec. max. pulse width
(3) Maximum value for Tj = 125 °C.
(4) Minimum value for linear and exponential waveshape to 80% rated V_{DRM}. Gate open. Tj = 125 °C.
(5) Non-repetitive value.
(6) The value of di/dt is established in accordance with EIA/NIMA Standard RS-397, Section 5-2-2-6. The value defined would be in addition to that obtained from a snubber circuit, comprising a 0.2 µF capacitor and 20 ohms resistance in parallel with the thristor under test.

Conducting - on state

Parameter	Symbol	Min.	Max.	Typ.	Units	Conditions
Average value of on-state current	$I_{T(AV)}$		900		A	Sinewave,180° conduction,T_c=67°C
RMS value of on-state current	I_{TRMS}		1400		A	Nominal value
Peak one cycle surge (non repetitive) current	I_{TSM}		13000 12000		A A	8.3 msec (60Hz), sinusoidal wave-shape, 180° conduction, T_j = 125 °C 10.0 msec (50Hz), sinusoidal wave-shape, 180° conduction, T_j = 125 °C
I square t	I^2t		700000		A^2s	8.3 msec and 10.0 msec
Latching current	I_L		800		mA	V_D = 24 V; R_L= 12 ohms
Holding current	I_H		400		mA	V_D = 24 V; I = 2.5 A
Peak on-state voltage	V_{TM}		1.6		V	I_{TM} = 2800 A; Duty cycle ≤ 0.01%
Critical rate of rise of on-state current (5, 6)	di/dt		400		A/µs	Switching from V_{DRM} ≤ 1000 V, non-repetitive
Critical rate of rise of on-state current (6)	di/dt		150		A/µs	Switching from V_{DRM} ≤ 1000 V

Email: Epe.rajesh@gmail.com | info@electropowerenterprise.in| rajesh9825022936@gmail.com, Phn: +91 – 9825022936|7600343075|7600343092
Website: https://electropowerenterprise.in/

ELECTRICAL CHARACTERISTICS AND RATINGS (cont'd) NEP0910LS200 - Power Thyristor

Gating

Parameter	Symbol	Min.	Max.	Typ.	Units	Conditions
Peak gate power dissipation	P_{GM}		200		W	t_p = 40 us
Average gate power dissipation	$P_{G(AV)}$		5		W	
Peak gate current	I_{GM}		10		A	
Gate current required to trigger all units	I_{GT}		300 150 125		mA mA mA	V_D = 6 V;R_L = 3 ohms;T_j = -40 °C V_D = 6 V;R_L = 3 ohms;T_j = +25 °C V_D = 6 V;R_L = 3 ohms;T_j = +125°C
Gate voltage required to trigger all units	V_{GT}	 0.15	5 3 		V V V	V_D = 6 V;R_L = 3 ohms;T_j = -40 °C V_D = 6 V;R_L = 3 ohms;T_j = 0-125°C V_D = Rated V_{DRM}; R_L = 1000 ohms; T_j = + 125 °C
Peak negative voltage	V_{GRM}		5		V	

Dynamic

Parameter	Symbol	Min.	Max.	Typ.	Units	Conditions
Delay time	t_d		1.5	0.7	µs	I_{TM} = 50 A; V_D = Rated V_{DRM} Gate pulse: V_G = 20 V; R_G = 20 ohms; t_r = 0.1 µs; t_p = 20 µs
Turn-off time (with V_R = -50 V)	t_q		200	125	µs	I_{TM} = 500 A; di/dt = 25 A/µs; $V_R \geq$ -50 V; Re-applied dV/dt = 20 V/µs linear to 80% V_{DRM}; V_G = 0; T_j = 125 °C; Duty cycle ≥ 0.01%
Reverse recovery charge	Q_{rr}		*		µC	I_{TM} = 500 A; di/dt = 25 A/µs; $V_R \geq$ -50 V

* For guaranteed max. value, contact factory.

THERMAL AND MECHANICAL CHARACTERISTICS AND RATINGS

Parameter	Symbol	Min.	Max.	Typ.	Units	Conditions
Operating temperature	T_j	-40	+125		°C	
Storage temperature	T_{stg}	-40	+150		°C	
Thermal resistance - junction to case	$R_{\Theta (j-c)}$		0.040 0.080		°C/W	Double sided cooled Single sided cooled
Thermal resistamce - case to sink	$R_{\Theta (c-s)}$		0.015 0.030		°C/W	Double sided cooled * Single sided cooled *
Mounting force	P	3000 13.3	3500 15.5		lb. kN	
Weight	W			9 225	oz. g	

* Mounting surfaces smooth, flat and greased

Note : for case outline and dimensions, see case outline drawing in page 4 of this Technical Data

ELECTRICAL CHARACTERISTICS AND RATINGS (cont'd) NEP0910LS200 - Power

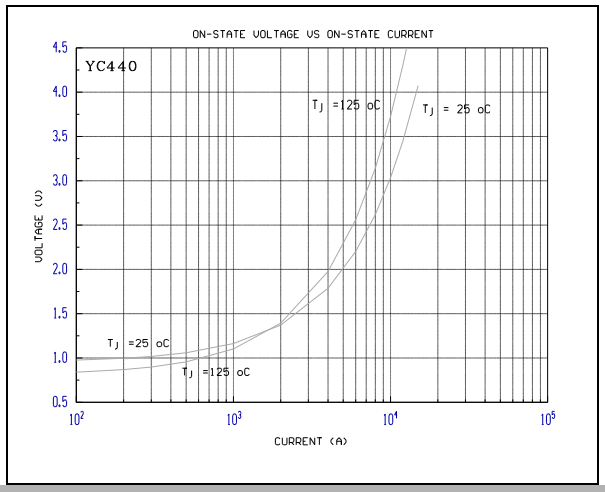

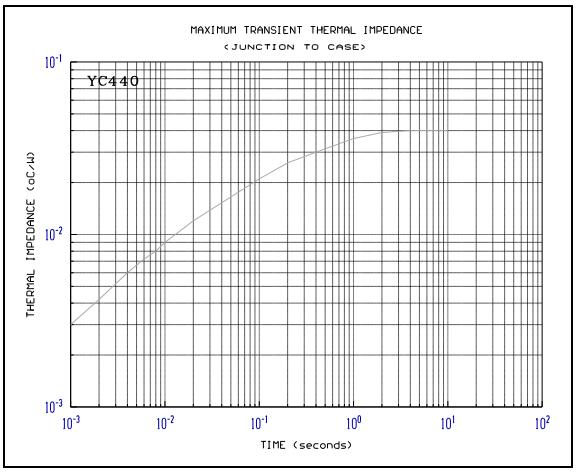

Thyristor

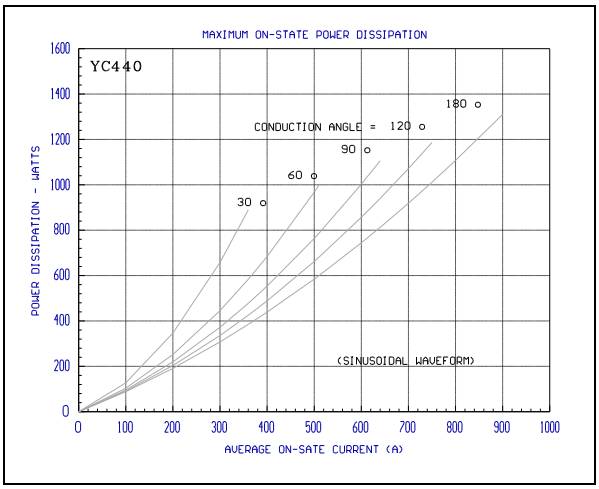

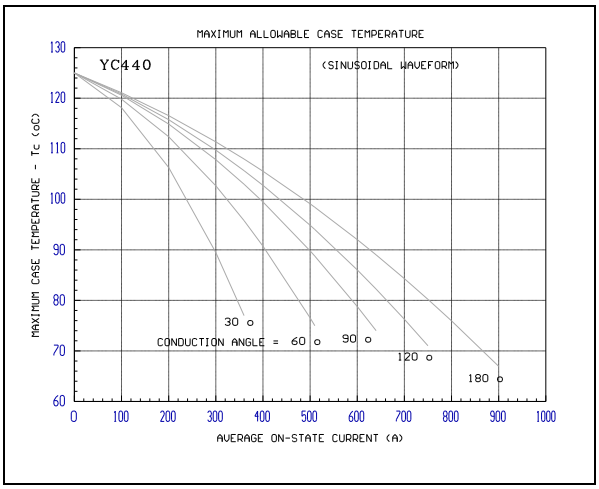

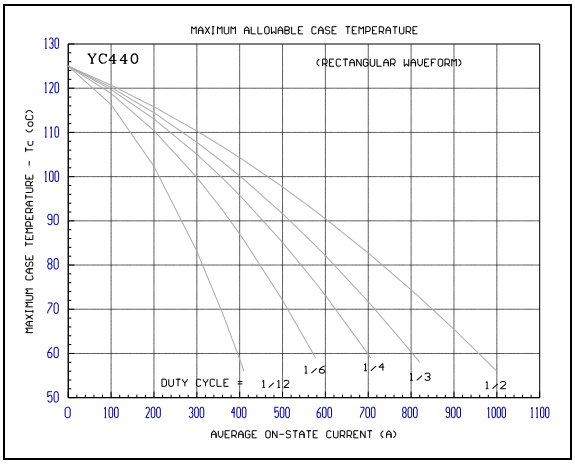

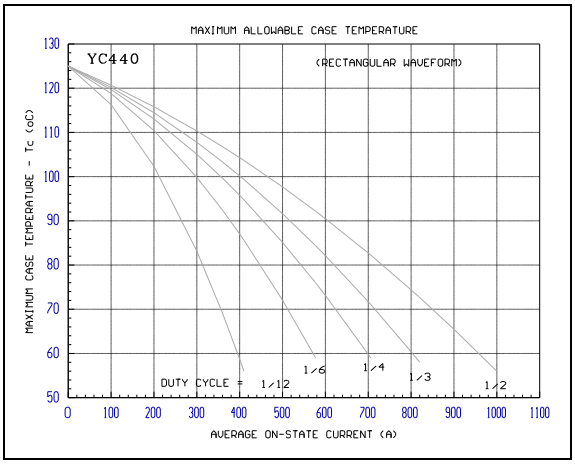

CASE OUTLINE AND DIMENSIONS. NEP0910LS200 - Power Thyristor

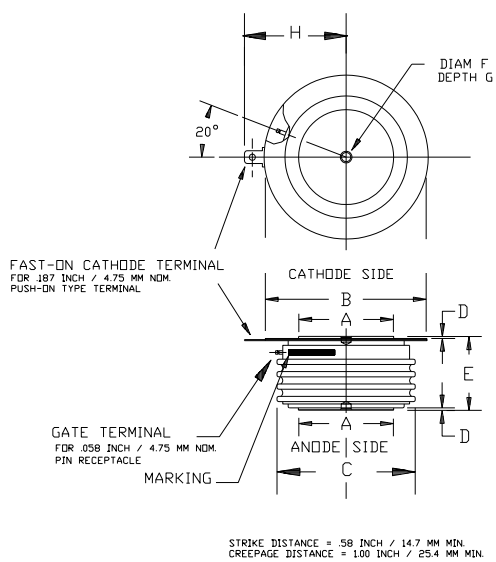

STRIKE DISTANCE = .58 INCH / 14.7 MM MIN.
CREEPAGE DISTANCE = 1.00 INCH / 25.4 MM MIN.

OUTLINE DIMENSIONS - CASE 3T

DIMENSIONS	Min. mm	Max. mm	Min. In.	Max. In.
DIAM A	33.02	34.29	1.30	1.35
DIAM B	55.88	63.50	2.20	2.50
DIAM C	--	54.61	--	2.15
D	0.76	--	0.03	--
E	25.40	27.18	1.00	1.07
F	3.30	3.81	0.13	0.15
G	1.78	2.03	0.07	0.08
H	--	36.32	--	1.43

OUTLINE CONFORMS TO JEDEC TO-200AC

* *

Email: Epe.rajesh@gmail.com | info@electropowerenterprise.in| rajesh9825022936@gmail.com, Phn: +91 – 9825022936|7600343075|7600343092
Website: https://electropowerenterprise.in/