Dual Thyristor Modules

TYPE: **SKKT 1000-16-EP (1000A – 1600V)**

ELECTRO POWER ENTERPRISE

"The Trusted Source for Induction Furnace Spare Parts"

Features

- Heat transfer through aluminium nitride ceramic isolated metal baseplate
- Precious metal pressure contacts for high reliability
- Thyristor with amplifying gate

Typical Applications

- DC motor control
- Temperature control
- Professional light dimming

Maximum Ratings

Symbol	Condition	Ratings	Unit
$I_{T(AV)}$	Single phase，half wave，sin 180° conduction ;T_C=85°C	1000	A
I_{TRMS}	Single phase，half wave，sin 180° conduction ;T_C=85°C	1484	A
I_{TSM}	T_j=125°C	30	kA
I^2t	T_j=125°C	4300	kA^2S
V_{DRM}/V_{RRM}	T_j=125°C	1600/1600	V
di/dt	non-repetitive	100	A/us
V_{iso}	A.C.1minute	2500	V
T_j		-40 ~ + 125	°C
T_{stg}		-40 ~ + 125	°C
W	About	3.6	Kg

Electrical Characteristics

Symbol	Condition	Ratings	Unit
I_{DRM} /I_{RRM}	AtV_{DRM}，Single phase，half wave，T_j=125°C	100	mA
V_{TM}	On-State Current 3000A，T_j=125°C	1.55	V
$V_{T(TO)}$	T_j=125°C	0.8	V
r_T	T_j=125°C	0.09	mΩ
R_{K1G1}		-	Ω
R_{K2G2}		-	Ω
t_{gd}	T_j=25°C;V_D=0.4V_{DRM} ; I_{TM}=I_{TAV}	-	us
t_q	dv_D/dt=50V/us;T_j=125°C; I_{TM}=I_{TAV}	-	us
I_{GT}/V_{GT}	T_j=25°C，I_T=1A，V_D=6V	200 / 3.0	mA/V
V_{GD}	V_D=67%V_{DRM}	0.2	V
DV/DT	V_D=67%V_{DRM}	800	V/us
I_H	T_j=25°C	300	mA
I_L	T_j=25°C	800	mA
$R_{th(j-c)}$	Thermal resistance Junction to case	0.31	°C/kW
$R_{th(c-h)}$	Thermal resistance case to heatsink	0.20	°C/kW

Dual Thyristor Modules

TYPE: **TYPE: SKKT 1000-16-EP (1000A – 1600V)**

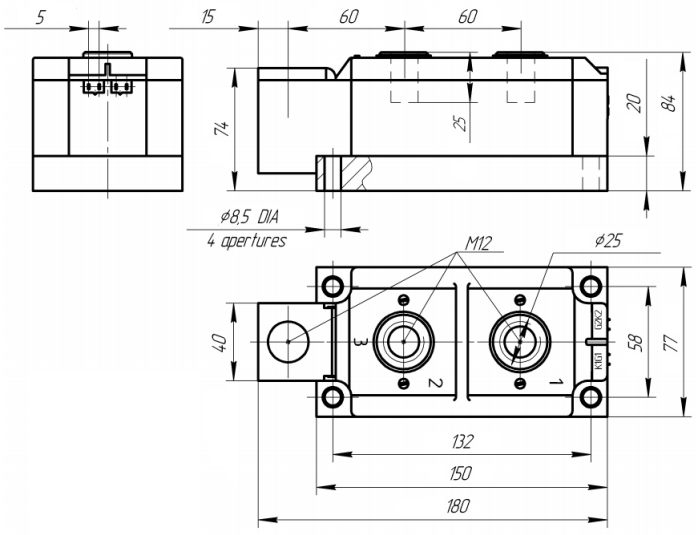

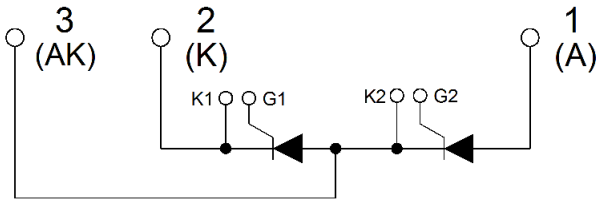

Electro Power Enterprise
11,12- B.G. CHAVDA INDUSTRIAL ESTATE, B/H VISHAL ENGINEERING NR SHRINATHJI ESTATE,
NUTAN NAGRIK BANK ROAD CHANGODAR, AHMEDABAD,GUJARAT 382213
Email: Epe.rajesh@gmail.com | info@electropowerenterprise.in
Phn: +91 7600343075|7600343092
Website: https://electropowerenterprise.in/